HYUNDAI

HY8500EFI

User Manual

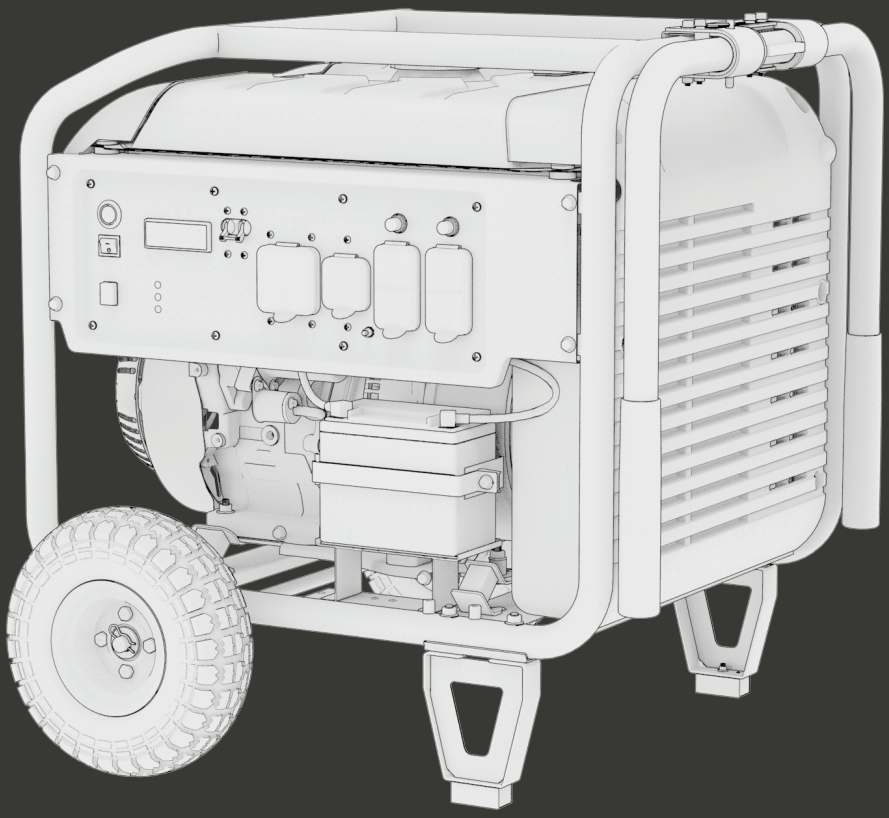

HYUNDAI

This product can expose you to chemicals including carbon monoxide, which is known to the State of California to cause cancer and birth defects or other reproductive harm. For more information go to www.P65Warnings.ca.gov

©2020 Hyundai Power Equipment. All Rights Reserved.
Licensed by Hyundai Corporation, Korea.

HY8500EFI_UG_EN_2020-10-14

Thanks for choosing the HY Series!

You're excited to power up, so we'll keep this brief. Let's get started!

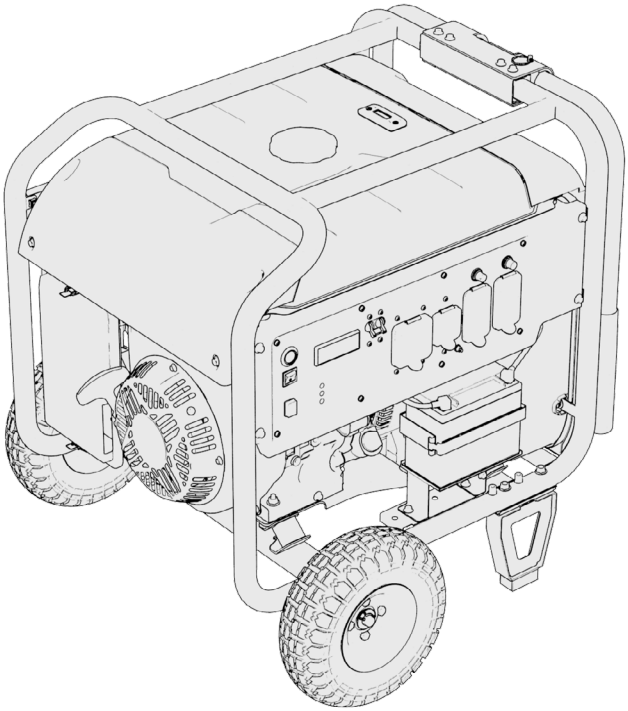

THIS PRODUCT MEETS ALL CERTIFICATION REQUIREMENTS FROM:

WE'VE GOT YOU COVERED!

Visit us online at www.hyundaipower.ca
or email us at support@hyundaipower.ca
or contact us by phone at 1-877-528-3772

SAVE THESE INSTRUCTIONS

This user guide contains important instructions for your product, that should be followed during installation and maintenance of your HY8500EFI.

All information in this publication is based on the latest product information available at the time of print.

Visit www.hyundaipower.ca for user guide updates and operation notices.

No part of this publication may be reproduced without written permission.

WARRANTY INFORMATION

YOU CAN REGISTER EASILY USING OUR ONLINE FORM:
www.hyundaipower.ca/register-warranty

See ‘Limited Warranty’ for more information.

Product registration will allow you to request warranty support in the future. Product registration is required for all product support and warranty coverage.

Warranty support, operation assistance and product support is provided by Midland Power Inc., a licensed manufacturer of Hyundai Power Equipment. Please contact us directly for any warranty service questions.

www.hyundaipower.ca
support@hyundaipower.ca
1-877-528-3772

HYUNDAI

TABLE OF CONTENTS

1. Safety 1

2. Generator Setup 5

2.1 Serial Number Location 5
2.2 Make Sure You have Everything 6
2.3 Assembly 7
2.4 Component Identification 9
2.5 Control Panel 10
2.6 Control Functions 11

3. Pre-Operational Check 13

4. Starting the Engine 17

4.1 Starting Your Generator 18

5. Generator Use 21

5.1 Output, Overload, and Oil Alert Indicator 21
5.2 AC Applications 22
5.3 Folding Handle 23

6. Stopping the Engine 24

7. Maintenance 25

7.1 Maintenance Schedule 26
7.2 Cleaning the Air Filter 27
7.3 Changing the Oil 28
7.4 Spark Plug Service 30
7.5 Spark Arrester Maintenance 31
7.6 Fuel Filter Maintenance 31
7.7 Replace the battery 32

8. Transportation & Storage 33

9. Mounting Guide 36

10. Troubleshooting 38

11. Technical Specifications 40

12. Wiring Diagram 41

13. Appendix 42

14. Emission Control System 43

15. Limited Warranty 45

1. SAFETY

⚠ DANGER ⚠

Using a generator indoors can KILL YOU IN MINUTES.
Generator exhaust contains carbon monoxide.
This is poison that you cannot see or smell.

NEVER use inside a home or garage. EVEN if doors and windows are open.

Only use OUTSIDE and far away from windows, doors, and vents.

Avoid other generator hazards
READ MANUAL BEFORE USE.

⚠ DANGER! ⚠

Using a generator indoors can kill you in minutes.

Generator exhaust contains carbon monoxide. This is a poison that you cannot see or smell.

NEVER use inside a home or garage.

⚠ WARNING!

This product can expose you to chemicals including carbon monoxide, which is known to the State of California to cause cancer and birth defects or other reproductive harm. For more information go to www.P65Warnings.ca.gov

1.1 OPERATOR SAFETY

⚠ WARNING!

- Always perform an oil, fuel and air filter check before starting the engine.
- Properly clean and maintain the equipment.
- Operate the generator according to instructions for safe and dependable service.
- Before operating the generator, read the user guide carefully. Otherwise, it may result in personal injuries or equipment damage.
- Never run the generator in an enclosed area, generator exhaust contains poisonous carbon monoxide gas.
- Pay attention to the warning labels. The engine exhaust system will become heated during operation and remain hot immediately after the engine is stopped.
- Gasoline is a highly flammable and explosive liquid. Stop the engine and

refuel in a well ventilated area.

- Use of gasoline with an ethanol content greater than 10% can damage the engine and fuel system and will void the manufacturer's warranty.
- When refueling the generator, keep it away from cigarettes, open flames, smoke and/or sparks.
- Place the generator at least 3 feet away from buildings or other equipment during operation.
- Run the generator on a level surface. Tilting the generator may result in fuel spills.
- Know how to stop the generator quickly and understand operation of all the controls. Never permit anyone to operate the generator without proper instructions.
- Keep children, pets and machinery with rotating parts away during operation.
- Do not operate the generator in rain or snow. The generator is a source of electrical shock. Do not operate with wet hands or feet.
- Do not expose to moisture, rain, or snow.
- Do not touch the spark plug while the engine is operating or shortly after the engine has been shut down.

1.2 AC SAFETY

⚠ WARNING!

Before connecting the generator to an electrical device or power cord:

- Make sure that everything is in proper working order. Faulty devices or power cords can lead to an electrical shock.
- Turn off the generator immediately if the device begins to operate abnormally. Then disconnect the device and investigate the problem.
- Make sure that the electrical rating of the device does not exceed that of the generator. If the power level of the device is between the maximum output power and the running power of the generator, the generator should not be run for more than 30 minutes.
- Refer to local and national electrical codes to determine grounding requirements for your application.
- There is a permanent conductor between the generator (stator winding) and the frame.
- When an extension cable is required, be sure to use a tough rubber sheathed flexible cable (according to IEC245 or equivalent standards). The maximum length of the extension cable: 196 feet (60 meters) for

cable of 15.5 gauge (1.5mm^2); 328 feet (100 meters) for cable of 13.25 gauge (2.5mm^2).

- Connections for standby power to a building's electrical system *must* be done by a qualified electrician and must comply with all applicable laws and electrical codes. Improper connections may cause serious injuries to electrical workers when the utility power is restored, the generator may explode or cause fires. The generator shall be connected through transfer equipment that switches all conductors other than the equipment grounding conductor. The frame of the generator shall be connected to an approved grounding electrode.
- For power outages, permanently installed stationary generators are better suited for providing backup power to the home. Even a properly connected portable generator can become overloaded. This may result in overheating or stressing the generator components, possibly leading to a generator failure.

1.3 MAINTENANCE SAFETY

⚠ WARNING!

- After any maintenance is performed, wash immediately using soap and clean water, repeated exposure to lubricant may cause skin irritation.
- Use rubber gloves when dealing with engine oil.
- Do not clean the air filter element with flammable liquids like gasoline due to risk of an explosion.
- Turn off the engine and disconnect the negative lead of the battery before performing any maintenance. Failure to do so can cause severe personal injury or death.
- Allow the generator set to cool down before performing any maintenance.
- Always wear safety glasses when cleaning the generator set with air.
- Do not clean the generator set with a pressure washer.
- When working with batteries, ventilate the area, use safety glasses, do not smoke. Always disconnect the negative first and reconnect it last.
- Always stop the generator set before removing the oil filler cap.
- Only qualified maintenance personnel with knowledge of fuels, electricity, and machinery hazards should perform maintenance procedures.
- Lubricate all exposed metal parts regularly. See chapter 7.1 for maintenance schedule.

1.4 OTHER SAFETY TIPS

⚠ WARNING ⚠
AVERTISSEMENT

TOXIC FUMES HAZARD. Running engines give off carbon monoxide, an odourless poisonous gas that can cause nausea, fainting, or death. Do not start engine indoors or in an enclosed area, even if the windows and doors are open.

DANGER TOXIQUE. Faire fonctionner un moteur dégage de l'oxyde de carbone, un gaz inodore toxique qui peut provoquer la nausée, évanouissement ou la mort. Ne démarrer pas le moteur à l'intérieur ou dans une espace clos, meme si les fenêtres et les portes sont ouvertes.

⚠ WARNING!

- To avoid breathing in poisonous carbon monoxide from the exhaust gases, adequate ventilation should be provided if the generator set is running in a partially enclosed space.
- If the generator set is stored outdoors, check all the electrical components on the control panel before each use. Moisture can damage the generator and can lead to an electric shock.
- Generators vibrate in normal use. During and after the use of the generator, inspect the generator as well as extension cords and power supply cords connected to it for damage resulting from vibration. Have damaged items repaired or replaced as necessary. Do not use plugs or cords that show signs of damage such as broken or cracked insulation or damaged blades.
- If you start to feel sick, dizzy, or weak after the generator has been running, move to fresh air RIGHT AWAY. See a doctor. You could have carbon monoxide poisoning.

2. GENERATOR SETUP

2.1 SERIAL NUMBER LOCATION

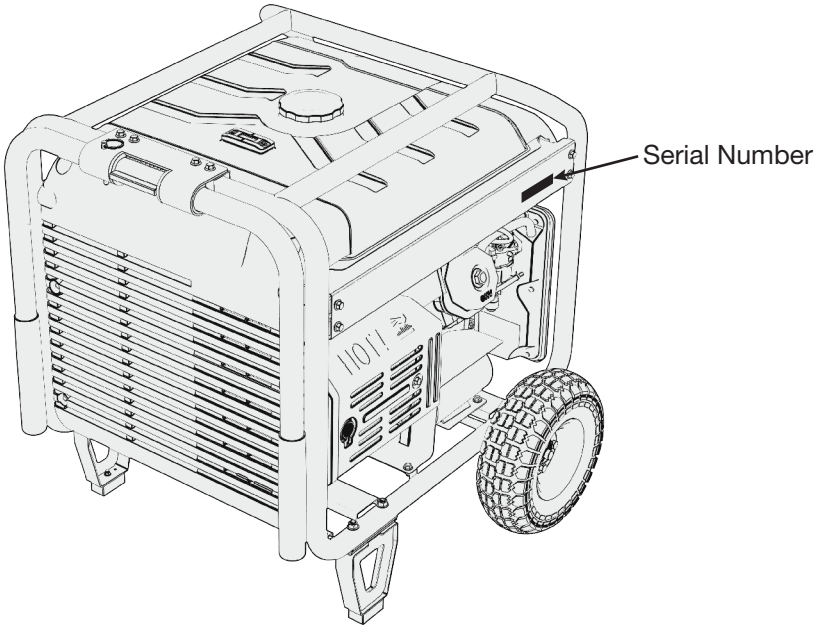

Take a moment to record the serial number from your unit.
You will need this for ordering parts, service, or warranty information.

Model Number: _____

Serial Number: _____

Date Purchased: _____

Location of Purchase: _____

Please register your generator warranty online by heading to hyundaipower.ca/register-warranty and completing the warranty form.

2.2 MAKE SURE YOU HAVE EVERYTHING

Use the following checklist to ensure your generator has everything in the box.

Box Contents

Part Name	Quantity
Inverter Generator	1
Wheel Kit	1
Handle Kit	1
Feet Kit	1
User Guide	1
Spark Plug Wrench - Sleeve	1
Spark Plug Wrench - Bar	1
Multi Screwdriver	1
Funnel	1
Oil Bottle	1

Handle and Wheel Kit

Part Name	Quantity
Wheel	2
Washer	2
Axle	1
Cotter Pin	2
Nuts	12
Foot	2
Handle	1
Bolts	4
Handle Mounting Plate	1
Handle Interior Front	1
Handle Interior Back	1
Handle Pin	1

2.3 ASSEMBLY

Installing the Feet

1. Flip the generator up onto its back and insert the bolts on the foot through the holes in the frame. Tighten the two nuts. Repeat for the other foot.

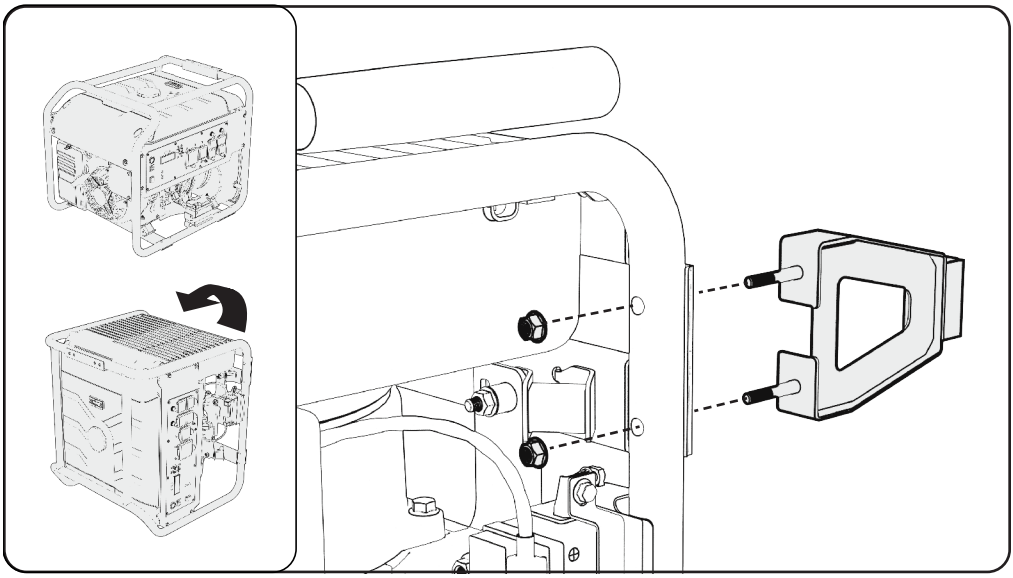

Installing the Wheels

1. Loosely secure the axle mount to the frame with two nuts (*do not tighten yet*). Repeat for other side. Place the axle through both axle mounts, center it, then tighten the nuts. Insert a washers, wheels, and cotter pins.

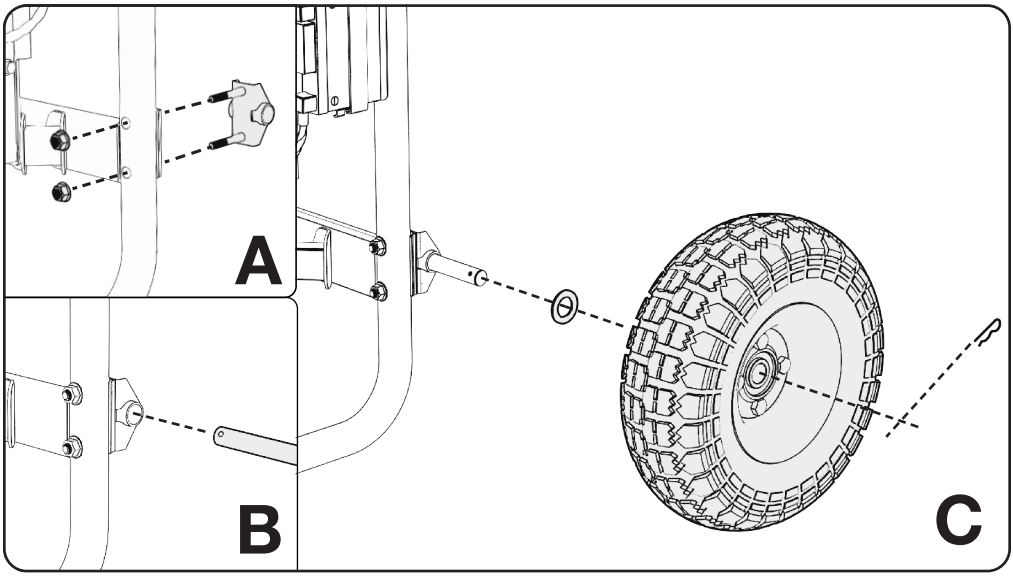

NOTE

- Do not operate the generator without wheels and feet. The wheels and feet lift the air intake off the ground. This prevents it from clogging with dirt and debris.

Connecting the Battery

⚠ WARNING!

Always use eye protection and wear protective gloves when working with a battery. Batteries contain sulfuric acid and emit explosive gases while charging, keep away from spark and fire.

Be careful not to short across battery terminals. Keep metal objects away from the terminals. Shorting the terminals together can cause sparks, damage to the unit, or even burns or explosions.

NOTE

- Do ***NOT*** reverse the polarity of the battery. Ensure you are connecting the negative to the negative (black) and the positive to the positive (red).
- Always disconnect the negative battery terminal first when working with the battery, then the positive terminal.

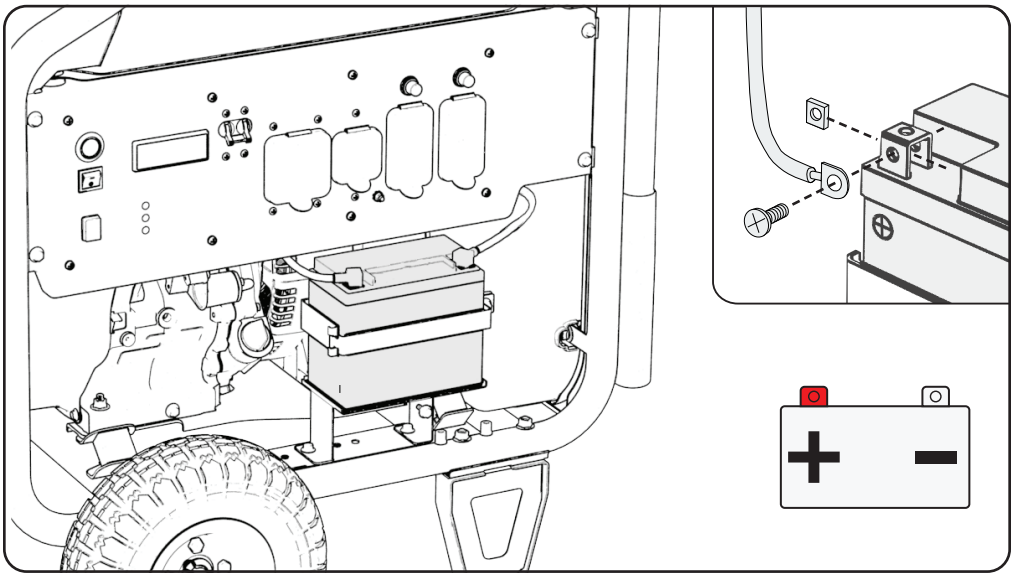

1. Connect the *red* cable with the positive terminal (+) of the battery. Secure the connection using the bolt and nut at the battery terminal.
2. Connect the *black* cable with the negative terminal (-) of the battery. Secure the connection using the bolt and nut at the battery terminal.

2.4 COMPONENT IDENTIFICATION

This section will show you how to identify key parts of your generator. Going over the terminology below will make sure we're on the same page.

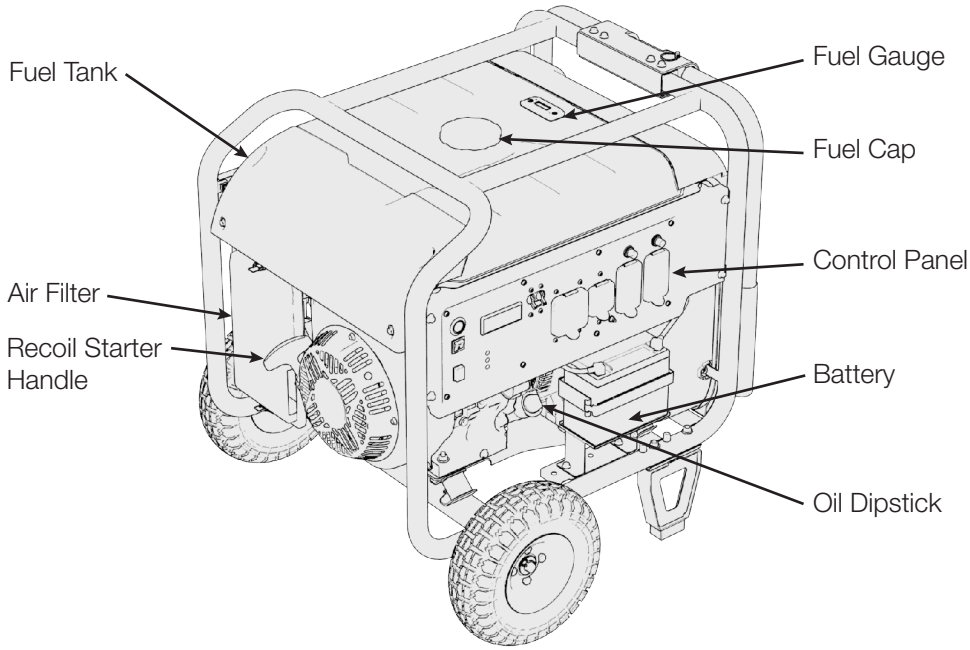

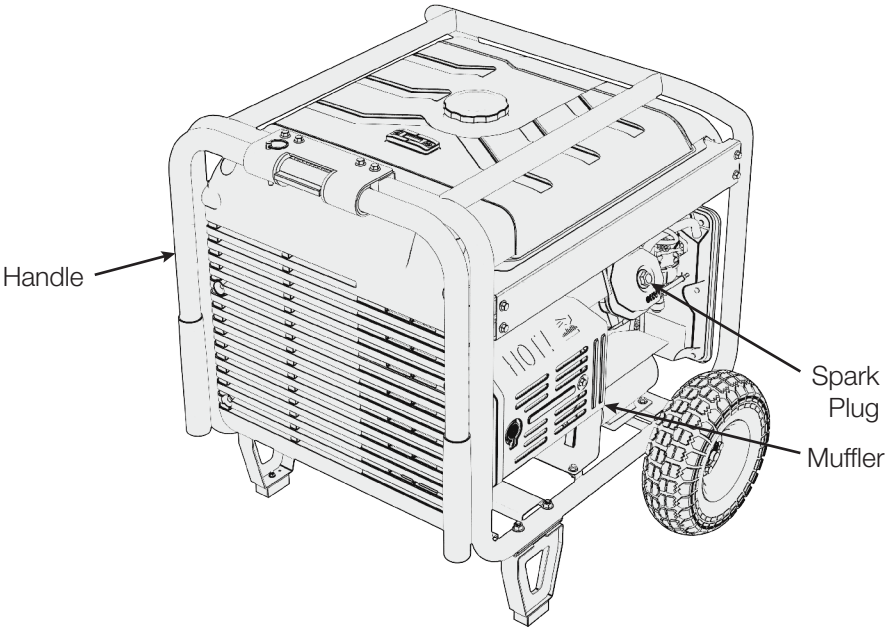

2.5 CONTROL PANEL

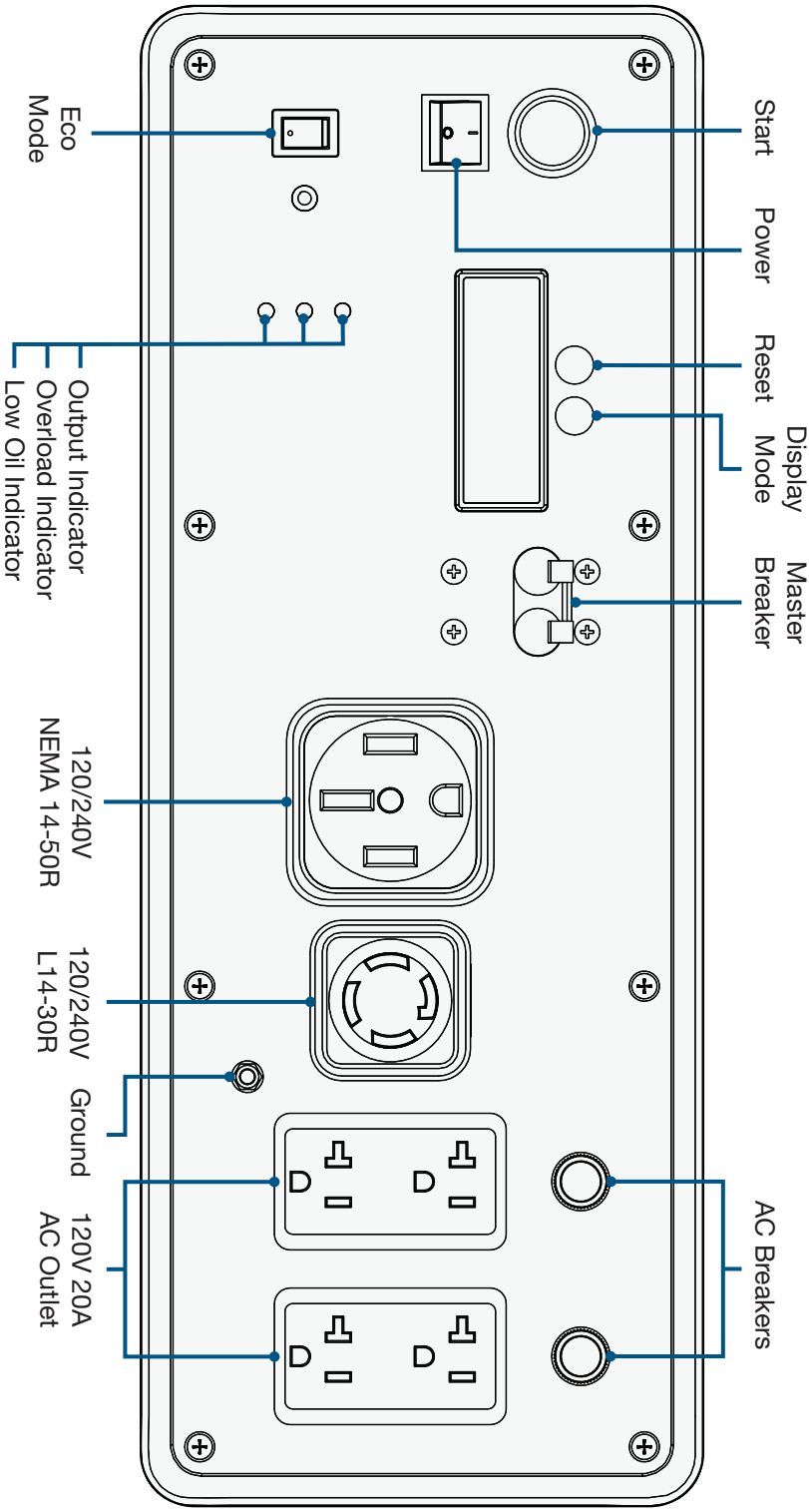

2.6 CONTROL FUNCTIONS

AC Circuit Breakers

- While the generator is running, the breakers should be in the ON position.
- If the current has exceeded its limits the breaker will automatically pop out to the OFF position. Reduce the electrical load on the generator and push the button back to the ON position.

Display Mode

- Press to turn on the backlight. Press again to cycle through the display functions.

EcoMode (Economy Control Switch)

- Turn EcoMode ON to minimize fuel consumption. In this mode the engine will dynamically meet the demand of the electrical load and will automatically go into an idle state if all loads are disconnected.
- Before connecting or removing a high load device to the generator, turn EcoMode OFF until that device has reached running power.
- When EcoMode is OFF, the engine runs at full speed.

Ground Terminal

⚠ WARNING!

Before using the ground terminal consult a qualified electrician, electrical inspector, or local agency having jurisdiction for local laws and codes that apply to the intended use of the generator.

- Neutral bonded to frame. The ground terminal is connected to the non-current carrying metal parts (such as the fuel tank), the frame, and the ground terminals of the AC outlets.

Low Oil Indicator Light

- The oil alert system is designed to prevent engine damage caused by an insufficient amount of oil in the crankcase. Before the oil level in the crankcase reaches an unsafe limit, the oil alert system will automatically shut down the engine (the power switch remains in the ON position).
- If the oil alert system shuts down the engine, the low oil indicator light (red) will turn on. Check the engine oil level.

Output and Overload Indicator

- In normal operation, the green output indicator light (READY) will remain on.
- If the generator is overloaded or a connected appliance has short-circuited, the output indicator light will turn off and the overload indicator light will turn on.

Power Switch

- ON: Switch must be in this position for the engine to start with electric or recoil start methods.
- STOP: Stops the engine.

Reset Button

- If the red overload indicator light is on, press and hold the reset button for 1 second until the overload indicator light turns off and the green output indicator light turns on. This will recover generator output without shutting down the engine.
- If the generator is running normally, the RESET button will have no effect.

NOTE

- The RESET button is available a maximum of 5 times for every full start of the generator. Shut down the generator and restart using the power switch to refresh available resets.

Start Button

- Press and hold the start button for 1s or until the engine starts.

NOTE

- The power switch must be in the ON position for the electric start function to work.

3. PRE-OPERATIONAL CHECK

Set the generator on a level surface and the power switch to OFF.

3.1 PREPARE THE AIR CLEANER

Clean and oil the air filter before your first use. Check the maintenance schedule for a complete cleaning guide.

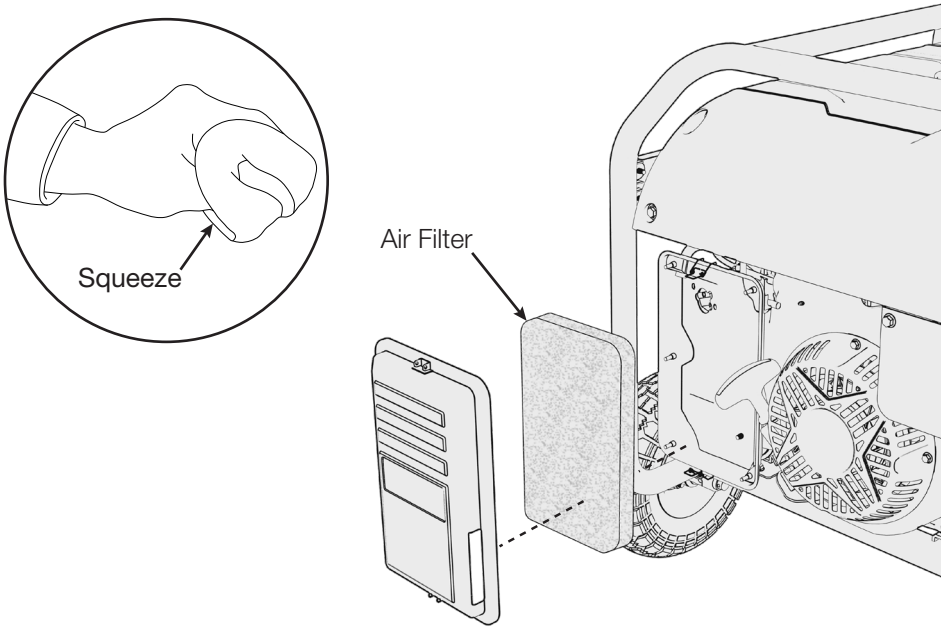

1. Undo the air filter cover and remove the filter.
2. Clean the air filter with soap and water or solvent (do not use gasoline) and squeeze dry, do not wring it out.
3. Soak in clean engine oil.
4. Gently squeeze out all excess oil and reinstall. Replace the filter if it is damaged.

NOTE

- Running the engine without the air filter will quickly degrade the engine.
- Always inspect the air filter before using the generator. Check and clean the air filter according to the maintenance schedule.

3.2 ADD ENGINE OIL

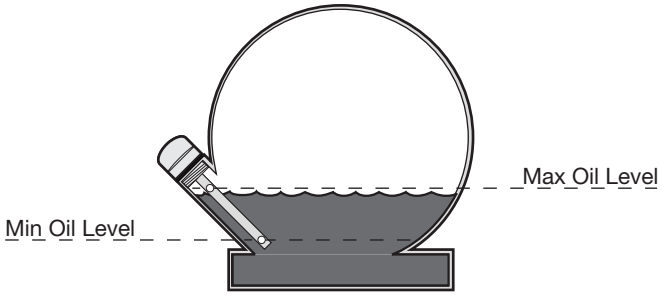

Oil Capacity
36 fl. oz. / 1.06L

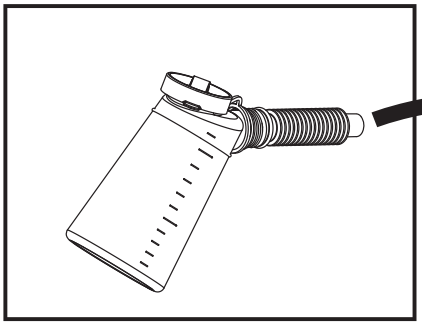

Oil Transfer Tool

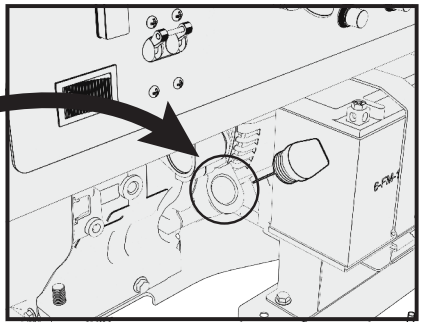

Oil Cap & Dipstick

1. Place the generator on a level surface.
2. Unscrew the dipstick.
3. Add 36 fl. oz. / 1.06 L of fresh engine oil then reinsert the oil cap *without* threading it in. Remove the cap and examine the oil level on the dipstick.
4. Add additional oil up to the maximum mark. DO NOT OVERFILL.
5. Reinsert the oil cap and tighten securely.

NOTE

- SAE 10W-30 or SAE synthetic 5W-30 oil is recommended for general use.
- Use of synthetic oil does not change maintenance intervals..
- Oil Capacity: 36 fl. oz. / 1.06 L
- DO NOT OVERFILL.

Effective Viscosity Range of Engine Oils

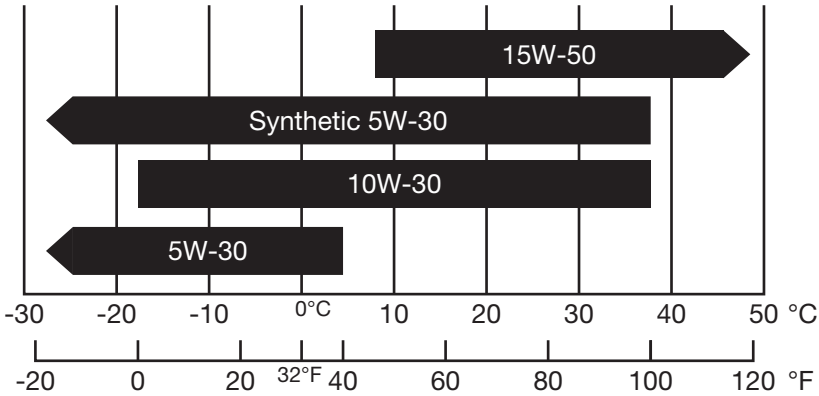

NOTE

- Do not tilt the generator when adding engine oil. This could result in overfilling and damage to the engine.
- Use high quality 4-stroke automotive engine oil, certified to meet or exceed API standard SG, SF, SAE ratings with strong detergents. Using non-detergent or 2-stroke oil could shorten the engine's working life.
- Do not mix different engine oils.
- Handle and store the engine oil with care, avoid getting dirt or dust into the engine oil.
- If the oil falls below a safe level, the low oil alert system will automatically shut off the engine. The low oil light will turn on.
- To avoid the inconvenience of unexpected engine shutoff, check the engine oil level as often as possible.

3.3 ADD FUEL

⚠ DANGER! ⚠

Gasoline is highly flammable and explosive under certain conditions.

Refuel in a well-ventilated area with the engine stopped. Do not smoke or allow open flames or sparks in the area where the generator is being refueled or where gasoline is stored. Do not overfill the tank. Be careful not to spill fuel when refueling. Wipe up any spilled gasoline and let the area dry before starting the engine.

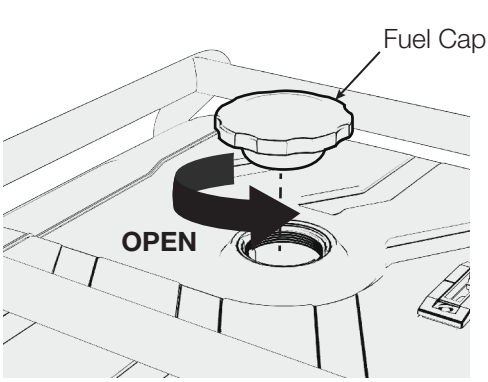

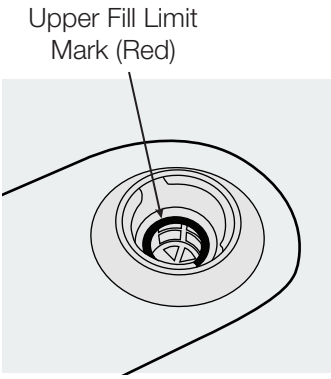

Fuel Capacity: 5.5 US gal. (21L)

NOTE

- Use of gasoline with an ethanol content greater than 10% can damage the engine and the fuel system and will void the manufacturer's warranty.
- Only use unleaded gasoline (Octane 85 or higher).
- Never use stale or contaminated gasoline, or an oil/gasoline mixture.
- Avoid getting dirt or water into the fuel tank.
- Do not use a mixture of gasoline containing methanol. This will cause serious damage to the engine.
- Gasoline substitutes such as gasohol are not recommended. They may be harmful to the fuel system components.

4. STARTING THE ENGINE

⚠ DANGER! ⚠

Using a generator indoors can KILL YOU IN MINUTES.

⚠ DANGER ⚠

Using a generator indoors can KILL YOU IN MINUTES.
Generator exhaust contains carbon monoxide.
This is poison that you cannot see or smell.

NEVER use inside a home or garage. EVEN if doors and windows are open.

Only use OUTSIDE and far away from windows, doors, and vents.

Avoid other generator hazards
READ MANUAL BEFORE USE.

Generator exhaust contains high levels of carbon monoxide (CO), a poisonous gas you cannot see or smell. If you can smell the generator exhaust you are breathing CO. Even if you cannot smell the exhaust, you could be breathing CO.

NEVER use a generator inside a home, garage, crawlspace, or other partly enclosed area, deadly levels of carbon monoxide can build up in these areas. Using a fan or opening windows and doors will NOT supply enough fresh air.

ONLY use a generator outdoors and far away from open windows, doors, and vents. These openings can pull in generator exhaust. Even when you use a generator correctly, CO may leak into the home. ALWAYS use a CO alarm in your home.

If you start to feel sick, dizzy, or weak after the generator has been running, move to fresh air RIGHT AWAY and seek medical attention. You could have carbon monoxide poisoning. Never run the generator in an enclosed or even partially enclosed area where people may be present.

⚠ WARNING!

Do *NOT* connect the generator to a structure unless the generator is connected via a transfer switch installed by a qualified electrician and complies with all applicable laws and codes. See 1.2 AC safety.

4.1 STARTING YOUR GENERATOR

Electric Start

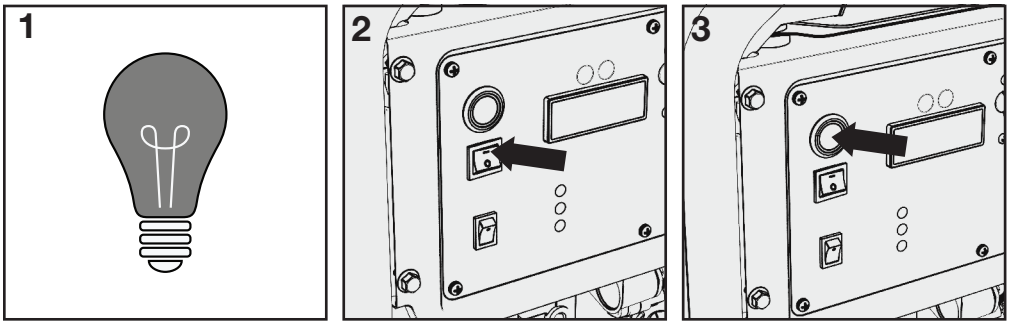

1. Ensure all connected devices are turned off.
2. Set the power switch to the ON position and wait 3 seconds for the EFI system to pressurize.
3. Press and hold the START button until the engine fires then release.

NOTE

- If the battery does not have enough voltage to start the engine, use the recoil handle.

Recoil Start

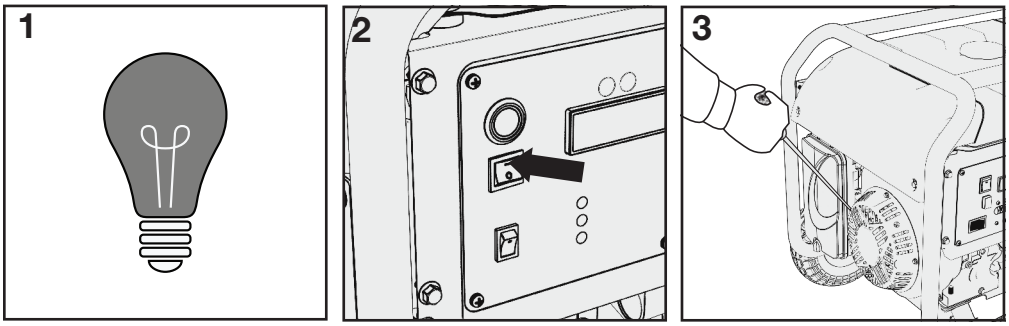

1. Ensure all connected devices are turned off.
2. Set the power switch to the ON position and wait 3 seconds for the EFI system to pressurize.
3. Pull the starter slowly until you feel it engage then pull quickly. Repeat until the generator starts.

NOTE

- Do not let the recoil handle snap back, gently return it to the unit.

High Altitude Operation with EFI

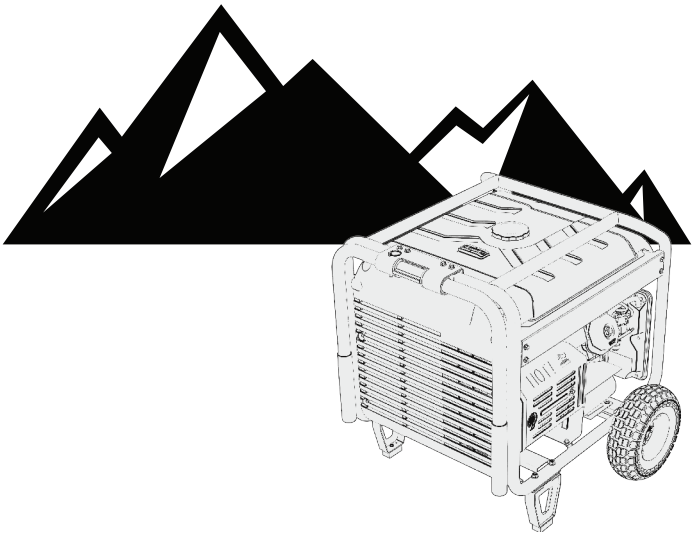

- The EFI (Electronic Fuel Injection) system is constantly monitoring air intake via the intake airflow sensor, and optimizes the fuel injection and ignition timing accordingly under all conditions.
- The EFI system can adapt from 0 - 9,200 ft. (2800m) elevation change without modifications.

NOTE

- Generator output decreases with altitude. Typical decreases are about 10% for every 1000m altitude gained after 2800 meters.
- For example, at 3800m the unit will be able to output 90% power.

5. GENERATOR USE

⚠ WARNING!

Before using the generator, consult a local electrician and local electrical codes to determine grounding requirements for your intended use. This generator is bonded neutral.

The generator MUST be isolated from the main power via a transfer switch installed by a qualified electrician when connected to a building's electrical system. Failure to do so may result in electrical shocks and fire.

To prolong engine life, do not exceed the rated running wattage. Do not connect an extension to the exhaust pipe.

Keep away from other electric cables or wires.

5.1 OUTPUT, OVERLOAD, AND OIL ALERT INDICATOR

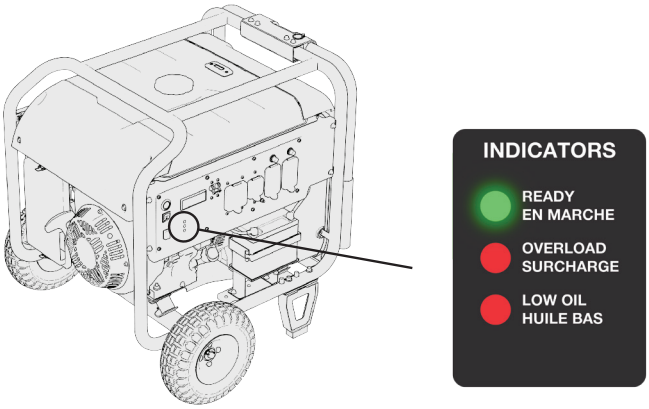

Light (Solid)			Description
Green	Output Indicator	ON	Indicates normal operation
		OFF	Indicates a problem or unit is off
Red	Overload Indicator	ON	Indicates overload or problem with connected appliances, disconnect any appliances and press and hold the reset button (1s).
		OFF	Indicates normal operation
Red	Low Oil Indicator	ON	Indicates insufficient oil in the crankcase
		OFF	Indicates normal operation

5.2 AC APPLICATIONS

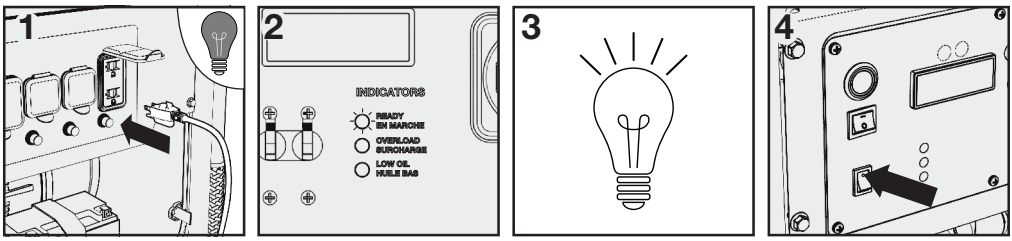

1. Confirm all attached electrical appliances are switched off.
2. Start the engine and make sure the output indicator light (READY) is on.
3. Turn on the appliances.
4. Turn EcoMode ON after the engine has warmed up.

NOTE

- Confirm all electrical appliances are in good working condition before connecting them to the generator. If an electrical appliance becomes abnormal, sluggish, or stops suddenly, shut off the generator engine immediately, and disconnect the appliance.
- Most appliances require more than their rated wattage upon startup.
- For continuous operation do not exceed the rated output of the generator (6800W).
- Do not run at maximum output for 30 minutes or longer.
- Neutral bonded for AC system.

5.3 FOLDING HANDLE

To extend the handle pull out the pin, lift the handle to the upright position and secure it in place with the pin.

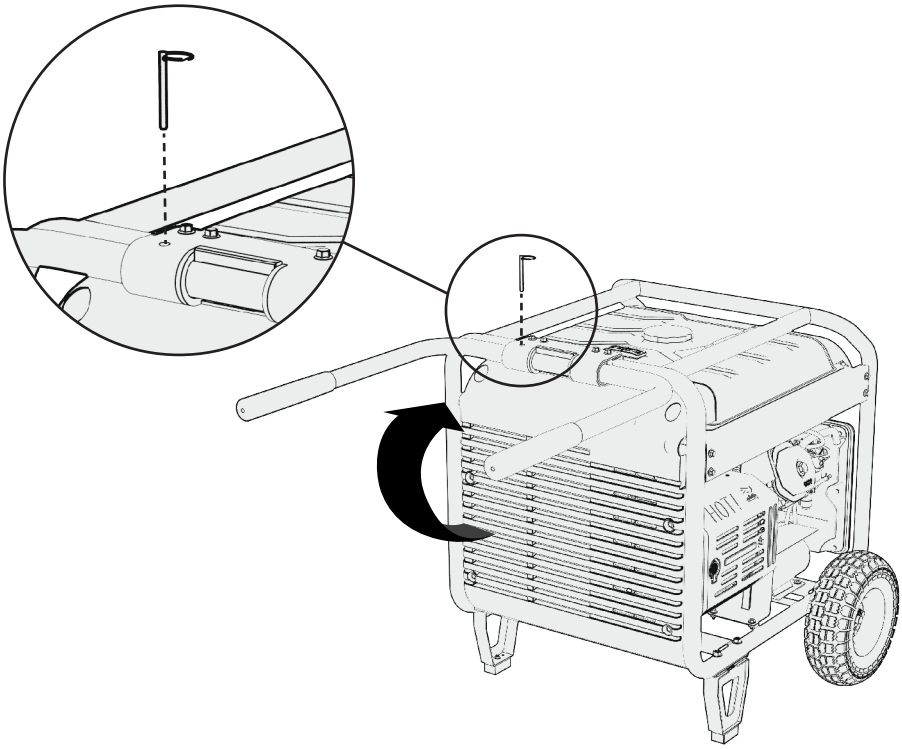

NOTE

- Do not rest any loads on the handle in the upright position

6. STOPPING THE ENGINE

Normal Operation

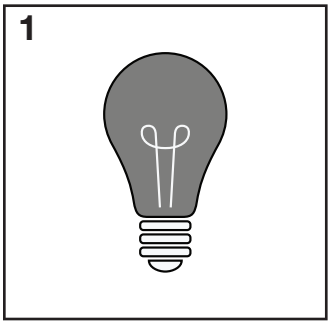

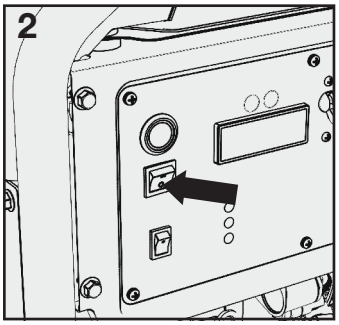

1. Switch off the connected electrical appliances.
2. Turn the power switch to STOP.

NOTE

- To stop the engine in an emergency, turn the power switch to STOP immediately.
- Allow the generator set to cooldown for at least 15 minutes before transporting.

7. MAINTENANCE

Proper maintenance keeps your generator in the best operating condition by ensuring safe, economical and trouble-free operation. Only use genuine parts and recommended fluids to replace the worn components. Improper maintenance may cause the generator to malfunction and can lead to serious injury. Contact customer support if you have any maintenance questions.

General Inspection Tips

- Look for fuel leaks around the fuel tank and fuel hose. Repair leaks immediately.
- Look and listen for exhaust leaks while the engine is running. Have all the leaks repaired before continuing operation.
- Check for dirt and debris and clean as necessary .
- Check the engine oil level and add oil as necessary.

7.1 MAINTENANCE SCHEDULE

Maintain the generator according to the maintenance intervals listed below.

NOTE

- Service more frequently when used in dusty areas.
- These items should be serviced by an authorized service center, unless you have the proper tools and are mechanically proficient. Refer to manual for service procedures.

Item	Task	Each Use	First 10 Hours	Every 50 Hours	Every 100 Hours	Every 300 Hours
Generator	General Inspection	•				
Engine Oil	Inspect Oil Level	•				
	Change		•*		•**	
Air Filter	Inspection	•				
	Cleaning			•		
Sediment Cup	Cleaning			•		
Spark Plug	Inspection & Cleaning				•	
	Replacement					•
Valve Clearance	Inspection & Adjusting					•
Combustion Chamber	Inspection & Adjusting					•
Fuel Tank and Strainer	Cleaning					•
Fuel Line	Cleaning	Every two months (replace if necessary)				
Exposed Metal Parts	Lubricate with oil	After every use and especially before storage				

* For first use of the generator.

**Change engine oil every 100 hours or yearly, whichever comes first.

7.2 CLEANING THE AIR FILTER

⚠ WARNING!

Using gasoline or other flammable solvents can cause a fire or explosion. Do not operate this product without an air filter.

A dirty air filter will restrict air flow into the engine. Clean and maintain the air filter regularly, especially in dusty areas.

NOTE

- Never run the generator without an air filter, doing so will quickly degrade the engine.

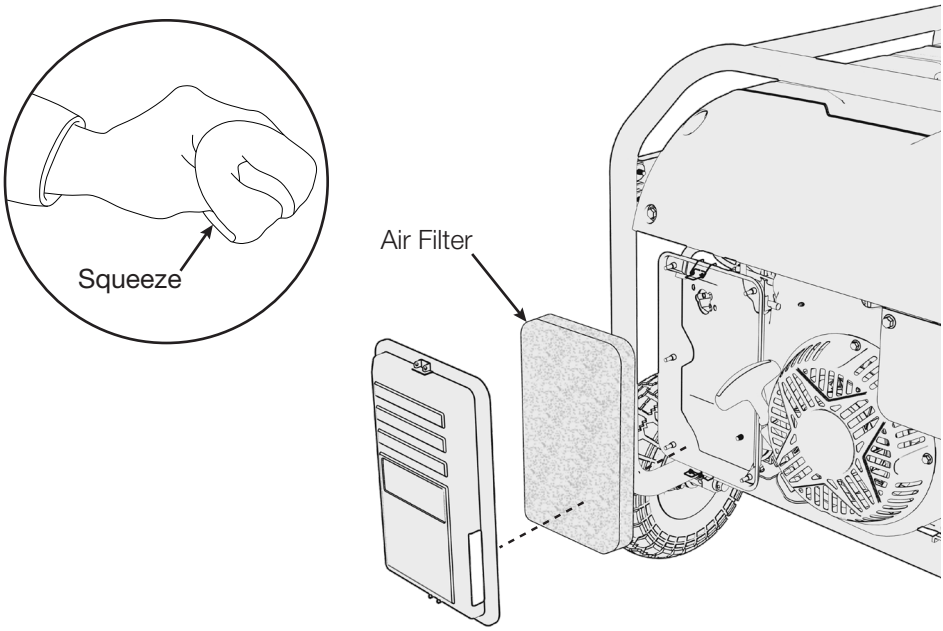

1. Undo and remove the air filter cover.
2. Remove the foam filter.
3. If the foam element is dirty, clean it in warm soapy water, rinse, and allow it to dry thoroughly, or clean in non-flammable solvent and allow to dry.
4. Dip the foam element in clean engine oil, then squeeze out all excess oil. The engine will smoke when started if too much oil is left in the filter.
5. Wipe down the air filter assembly housing and reinstall into the unit.

7.3 CHANGING THE OIL

⚠ WARNING!

Used motor oil can cause skin irritations if left in long-term contact with skin. Thoroughly wash off used oil as soon as possible with soap and water.

Do not dispose of used oil in drains or on soil. Local service shops provide environmentally-friendly disposal methods.

NOTE

- SAE 10W-30 or Synthetic 5W-30 oil is recommended for general use.
- Use of synthetic oil does not change maintenance intervals.
- Oil Capacity: 36 fl. oz. / 1.06L
- DO NOT OVERFILL.

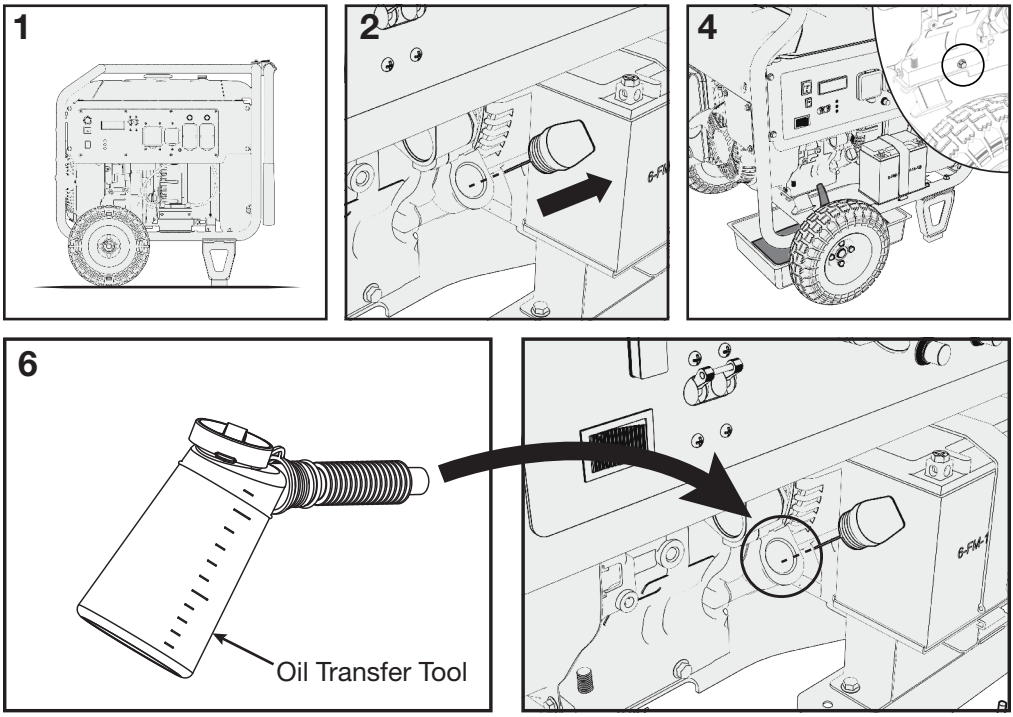

1. Place the generator on a level surface and run it for a few minutes to warm up the oil. Make sure the engine switch is set to STOP before proceeding.
2. Unscrew the oil cap and clean the dipstick.
3. Place oil drain pan under the oil drain bolt.
4. Remove the drain bolt and allow the oil to drain completely.
5. Reinstall the drain bolt and tighten securely.

6. Add fresh engine oil (approx. 36 fl. oz. / 1.06 L) then reinsert the oil cap *without* threading it in. Remove the cap and examine the oil level on the dipstick.
7. Add additional oil up to the maximum mark. DO NOT OVERFILL.

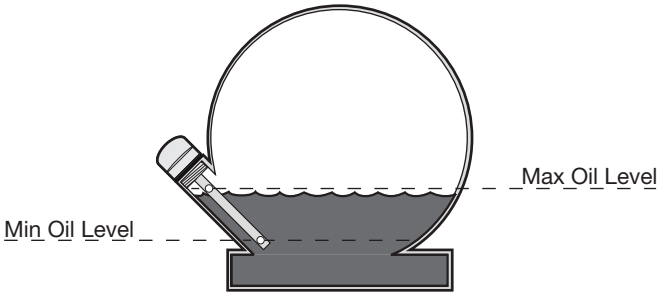

Oil Capacity
36 fl. oz. / 1.06L

NOTE

- Do not tilt the generator when adding engine oil. This could result in overfilling and damage to the engine.
- Use high quality 4-stroke automotive engine oil, certified to meet or exceed API standard SG, SF, SAE ratings with strong detergents. Using non-detergent or 2-stroke oil could shorten the engine's working life.
- Do not mix different engine oils.
- Handle and store the engine oil with care, avoid getting dirt or dust into the engine oil.
- If the oil falls below a safe level, the low oil alert system will automatically shut off the engine. The low oil light will turn on.
- To avoid the inconvenience of unexpected engine shutoff, check the engine oil level every use.

Effective Viscosity Range of Engine Oils

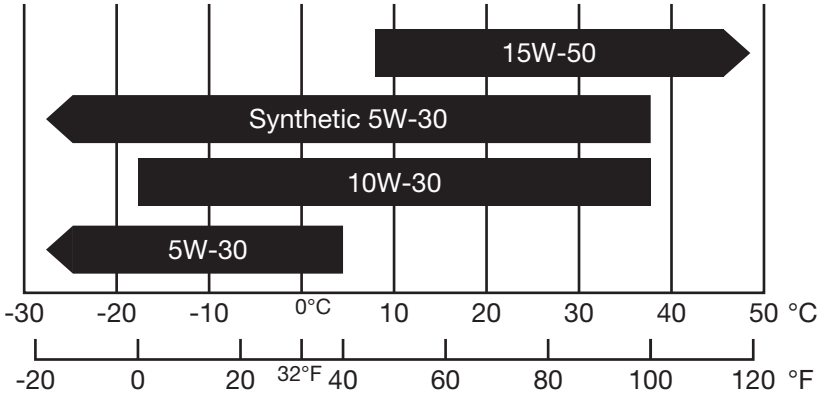

7.4 SPARK PLUG SERVICE

NOTE

- Do not rinse spark plug in water. Follow guidelines and be careful not to overtighten the spark plug.

Recommended spark plug: NGK **BCPR5ES**

Check the spark plug gap and clean the carbon deposits at the bottom of the spark plug.

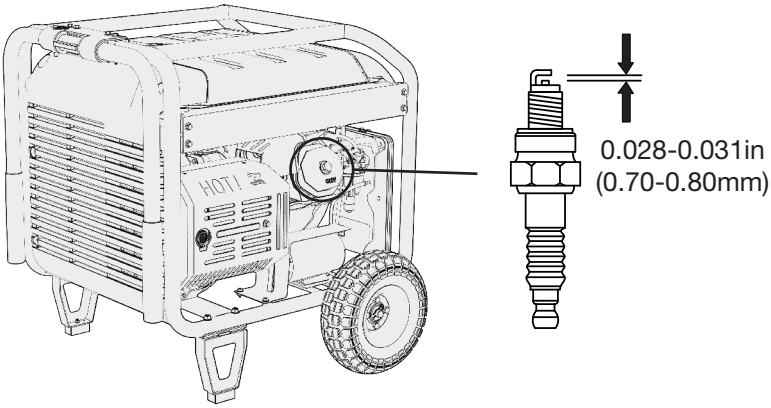

Tighten 1/2 turn when installing a new spark plug.

Tighten 1/8 TO 1/4 turn when re-installing an old spark plug.

1. Remove the spark plug cap.
2. Remove the spark plug with the included spark plug wrench.
3. Visually inspect the spark plug. Replace with a new one if the insulation is cracked or chipped. Clean with a wire brush if the spark plug is reused.
4. Measure the spark plug gap with a feeler gauge. The normal value is: 0.028 - 0.031in (0.7-0.8mm). Adjust the gap by carefully bending the electrode.
5. Carefully reinstall the spark plug by hand, to avoid cross-threading. A new spark plug should be tightened 1/2 turn with a wrench. A used spark plug should be tightened 1/8 to 1/4 turn with wrench.
6. Reinstall the spark plug cap.

NOTE

- The spark plug must be securely tightened or it could cause the spark plug to heat up, enough to damage the engine.
- Never use a spark plug with an improper heat range.

7.5 SPARK ARRESTER MAINTENANCE

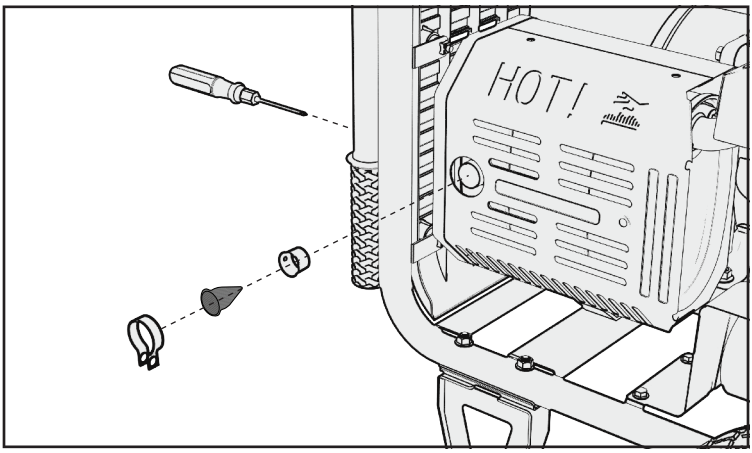

1. After the engine has cooled down remove the spark arrester from the muffler. Loosen the screw through the access hole in the front panel.
2. Use a brush to remove carbon deposits from the spark arrester. If the spark arrester is worn down, replace it.
3. Reinstall the spark arrester.

7.6 FUEL FILTER MAINTENANCE

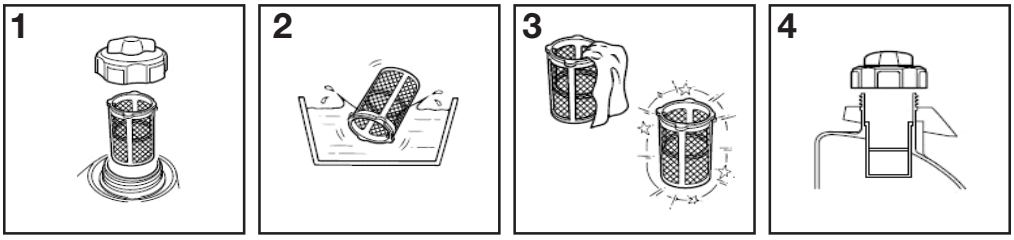

1. Remove the fuel cap and filter.
2. Clean the filter with solvent.
3. Wipe the filter.
4. Reinsert the filter.

7.7 REPLACE THE BATTERY

⚠ WARNING!

Always use eye protection and wear protective gloves when working with a battery. Batteries contain sulfuric acid and emit explosive gases while charging, keep away from spark and fire.

Be careful not to short across battery terminals. Keep metal objects away from the terminals. Shorting the terminals together can cause sparks, damage to the unit, or even burns or explosions.

NOTE

- Do ***NOT*** reverse the polarity of the battery. Ensure you are connecting the negative to the negative (black) and the positive to the positive (red).
- Always disconnect the negative battery terminal *first* when working with the battery, then the positive terminal.

1. Disconnect the *black* negative (-) connection, then the positive *red* (+) connection.
2. Undo the battery bracket and replace with new battery.
3. Re-connect the *red* cable to the positive red terminal and then the *black* cable to the negative black terminal.
4. Re-fasten the battery bracket to secure the battery in place.

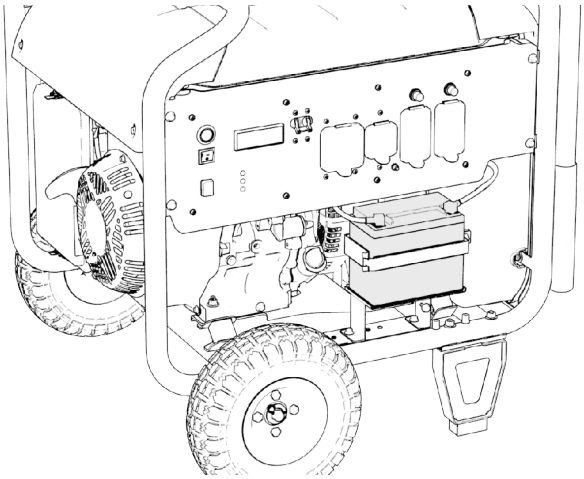

Battery Specifications		
Voltage	Capacity	Dimension
12V	14 Ah	*5.9” x 3.2” x 5.1”mm (LxWxH)* *150mm x 80mm x 130mm (LxWxH)*

8. TRANSPORTATION & STORAGE

Draining the Fuel Tank

1. Turn OFF the engine and allow the unit to cool. Remove the fuel cap and the debris screen underneath the fuel cap.
2. Empty the fuel tank using a siphon and an approved gasoline container.

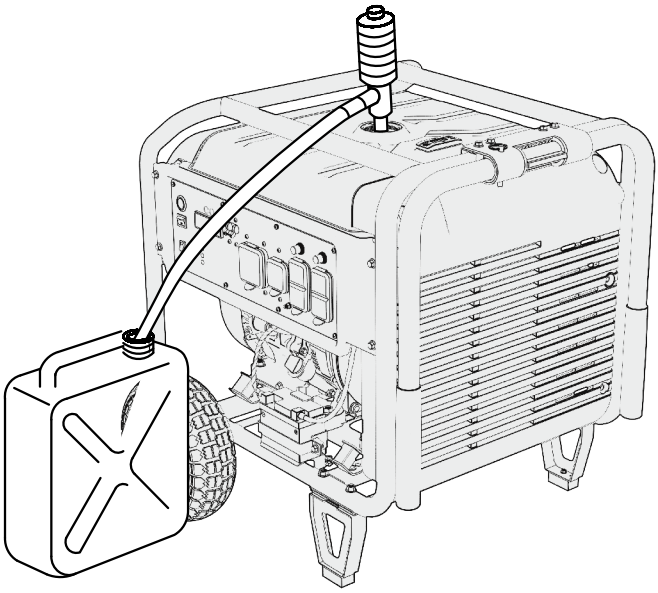

Storage

Gasoline can oxidize in as little as 30 days, causing gum and varnish to build up in fuel system components such as injectors. Keep fuel fresh and use a stabilizer.

NOTE

- Ensure that the storage area is free of excess humidity and dust and away from heat and ignition sources.
- To prevent corrosion, touch up paint chips, coat screws and exposed metal with anti-rust oil at least twice per year.

Storage Duration	Preparation Required
Less than 1 Month	■ No storage preparation required, simply store as is.
1 Month to 1 Year	■ Drain the old gas and completely fill the tank with fresh gas before storage. Add fuel stabilizer according to the manufacturer's directions. Adding a quality fuel stabilizer can keep gas fresh for up to a year.
1 Year or More	■ Drain off the gasoline from the fuel tank, and store in a suitable container. This will help prevent deposits from forming in the fuel system. ■ Change oil while engine is still warm from operation. ■ Remove the spark plug, and pour a tablespoon of clean engine oil (10~20ml) into the cylinder. Revolve the engine several times by pulling on the recoil start to distribute the oil. Reinstall the spark plug. Pull the starter grip slowly until you feel resistance. At this point, the piston is coming up on its compression stroke and both the intake and exhaust valves are closed. This position helps to protect the engine from internal corrosion.

Transporting the Generator

1. Do not overfill the fuel tank, there should be no residual fuel on the neck of tank.
2. Allow the generator to cool for at least 15 minutes before loading onto a vehicle.
3. Do not use the generator in the vehicle. The generator should ONLY be used while in a well ventilated area.
4. Avoid exposing the generator to prolonged direct sunlight while in an enclosed vehicle. The high temperature inside the vehicle could cause fuel to vaporize resulting in a possible explosion.

Drain the generator of fuel and oil before being transported on rough roads.

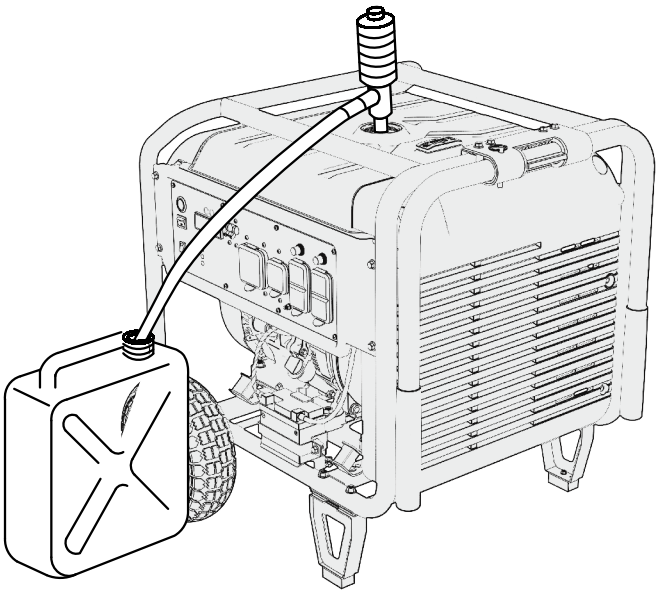

9. MOUNTING GUIDE

There are 8 mounting holes in the bottom of the frame, use bolts with nuts to securely mount the generator. It is recommended to cut slots in the mounting surface.

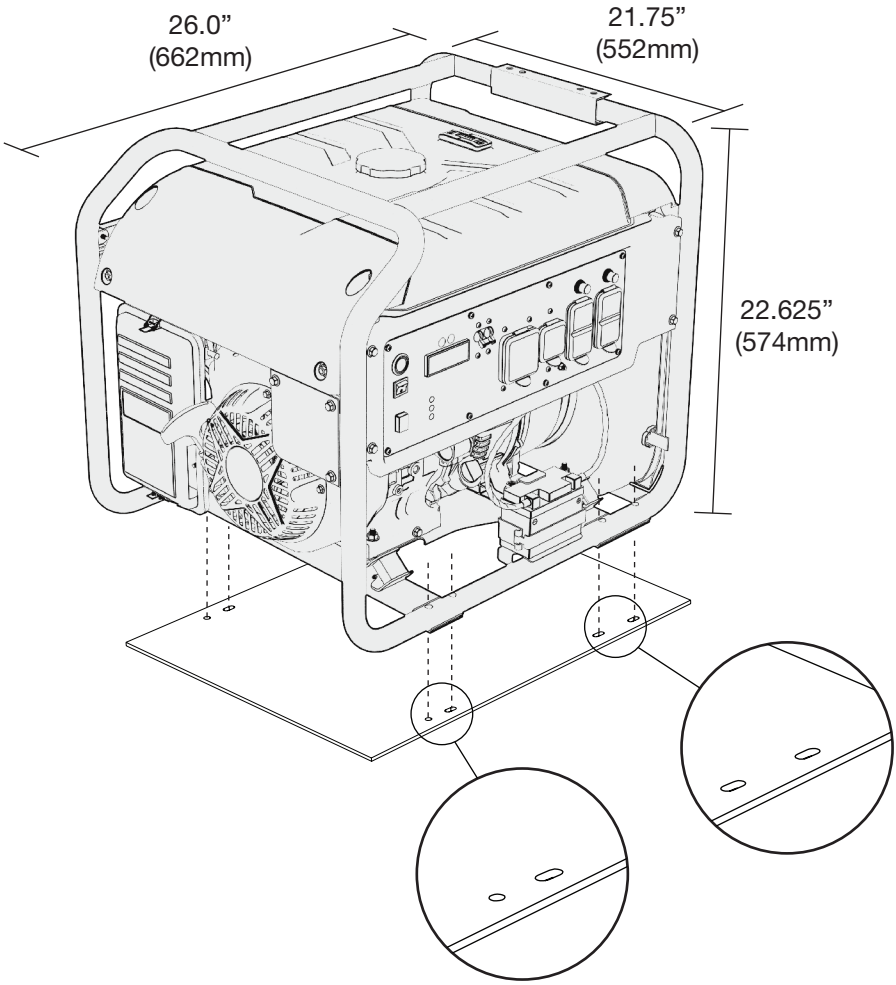

Bottom View

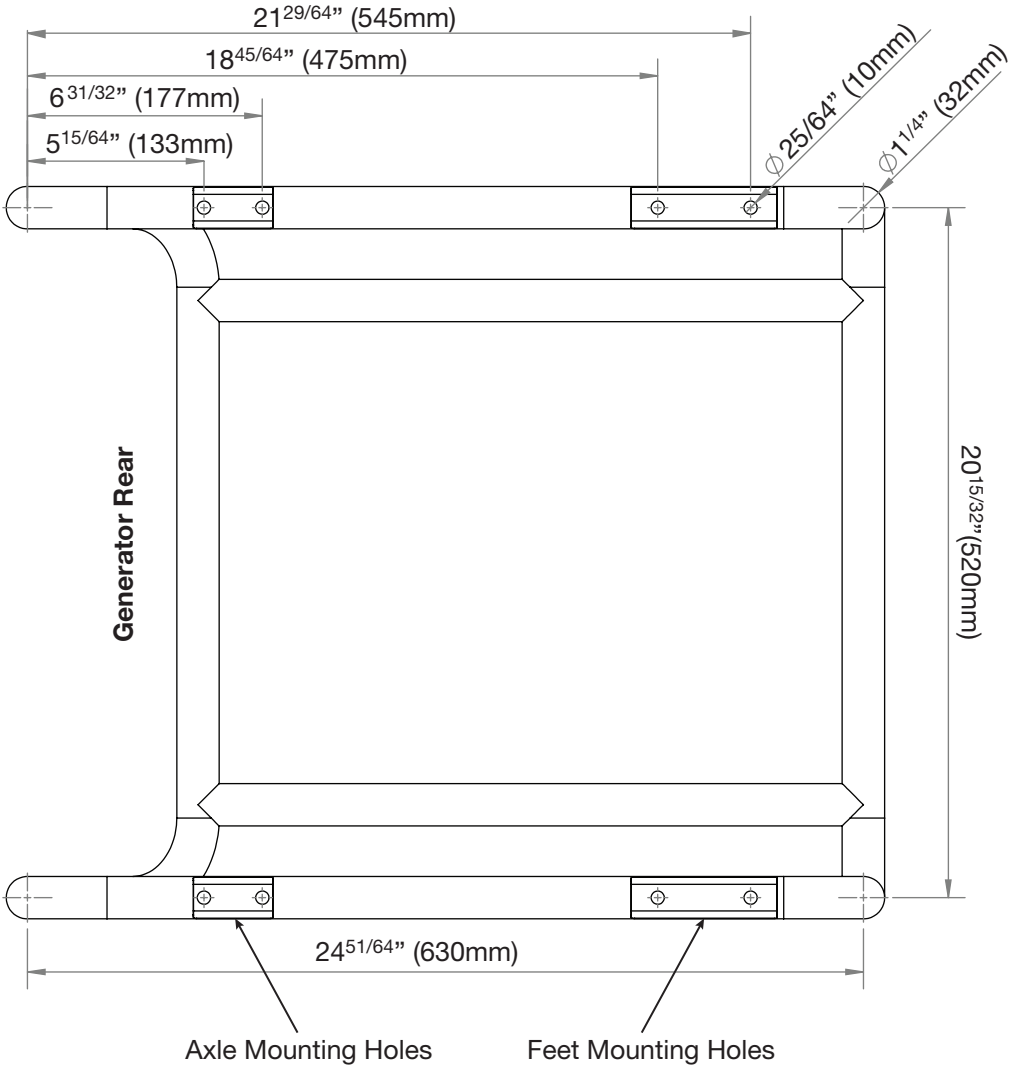
21 29/64" (545mm)
18 45/64" (475mm)
6 31/32" (177mm)
5 15/64" (133mm)
Ø 25/64" (10mm)
Ø 1 1/4" (32mm)
Generator Rear
20 15/32" (520mm)
24 51/64" (630mm)
Axle Mounting Holes
Feet Mounting Holes

10. TROUBLESHOOTING

If the engine does not start:

If appliances do not operate:

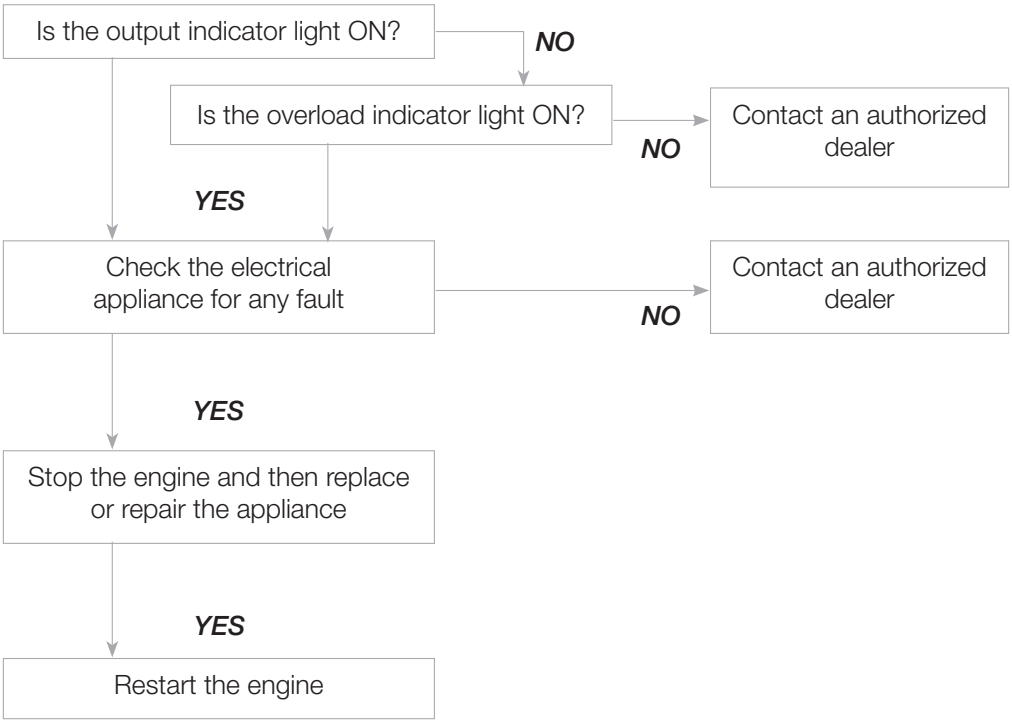

DC receptacle without any electricity:

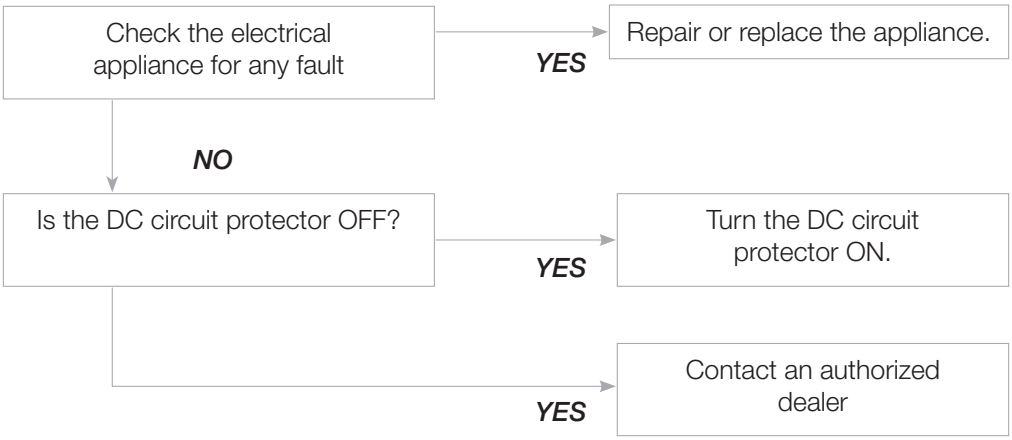

11. TECHNICAL SPECIFICATIONS

	SPECIFICATIONS	PARAMETERS
ENGINE	Type	4-stroke, overhead valve, single cylinder, forced-air cooling
	Engine Displacement	420cc (25.63 cu-in)
	Bore* Stroke	90mm x 66mm (3.54x 2.60 in.)
	Engine Speed	2600-3700 rpm
	Compression Ratio	8.8:1
	Ignition System	TCI
	Start System	Electric, Recoil
	Spark Plug Gap	0.028 - 0.031in (0.70-0.80mm)
	Spark Plug	BCPR5ES (NGK)
	Fuel Type	Unleaded Gasoline
	Oil Capacity	36 fl.oz / 1.06L
	Oil Weight	SAE 10W-30
GENERATOR	Model Name	HY8500EFI
	Rated Frequency	60Hz
	Rated Voltage	120/240V
	Rated Current	54.2A/27.1A
	Rated Output Power	6800W
	Max. Output Power	8500W
OTHER SPECIFICATIONS	Fuel Tank Volume	5.5 Gal / 21L
	Continuous Running Time	7.0h @ 6800W
	Working Ambient Temperature	5°F to 104°F (-15°C to 40°C)
	Max. Altitude	9,200 ft (2800m)
	Sound Power Level at 7m	76dB(A)
	Dimensions (L*W*H)	710mm*715mm*762mm
	Net Weight	87kg (190 lbs)

- Noise level is measured when EcoMode is ON and may vary in different environments.

12. WIRING DIAGRAM

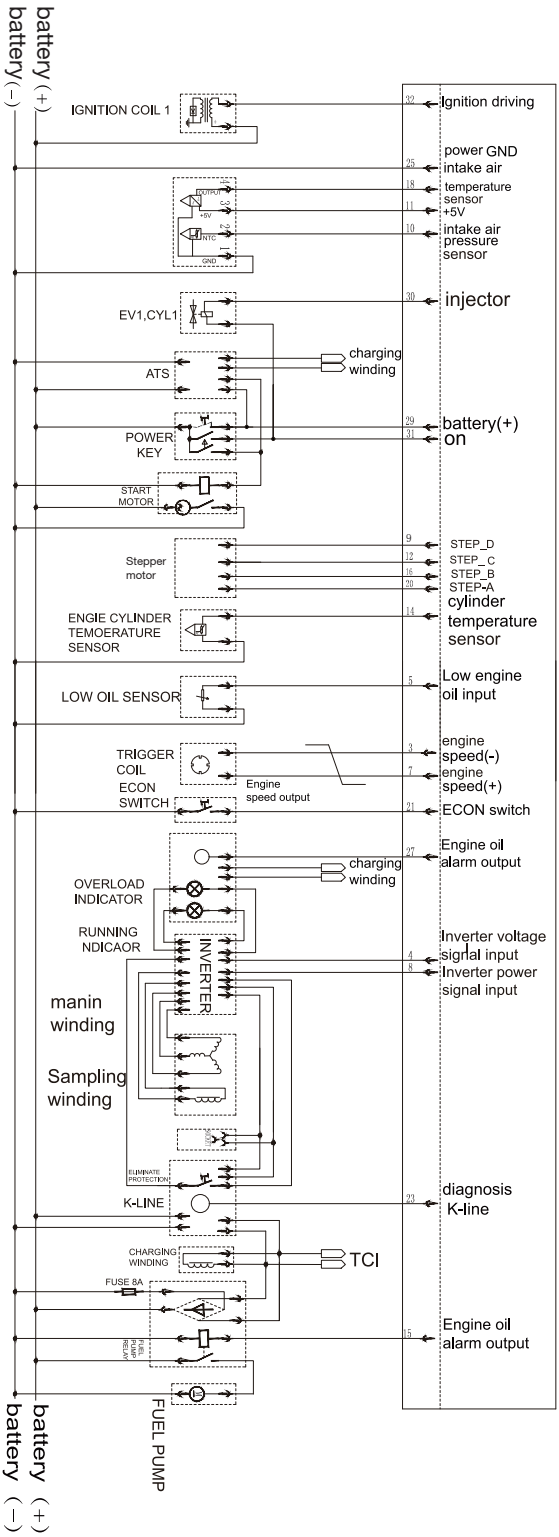

13. APPENDIX

The standard condition of rated power output:
Altitude: 0m
Ambient temperature: 77°F (25°C)
Relative humidity: 30%

Factor of Environment Correction:

Altitude (m)	Ambient Temperature°F (°C)				
	77° (25°)	86° (30°)	95° (35°)	104° (40°)	113° (45°)
0	1	0.98	0.96	0.93	0.90
500	0.93	0.91	0.89	0.87	0.84
1000	0.87	0.85	0.82	0.80	0.78
2000	0.75	0.73	0.71	0.69	0.66
3000	0.64	0.62	0.60	0.58	0.56
4000	0.54	0.52	0.50	0.48	0.46

NOTE:
Relative humidity 60% correction factor C-0.01
Relative humidity 80% correction factor C -0.02
Relative humidity 90% correction factor C-0.03
Relative humidity 100% correction factor C-0.04

Example:

Rated power (PN) 2.8kVA generator (Altitude: 1000m) Ambient temperature: 35°C, Relative humidity: 80%

P=Pn*(C-0.02)=2.8*(0.82-0.02)=2.24kVA

14. EMISSION CONTROL SYSTEM

Emission Source

Exhaust gas contains carbon monoxide, nitrogen oxides (NOx) and hydrocarbons. It is very important to control the emissions of NOx and hydrocarbons as they are a major contributor to air pollution. Carbon monoxide is a poisonous gas. The emission of fuel vapors is a source of pollution as well. The generator engine utilizes a precise air-fuel ratio and emission control system to reduce the emissions of carbon monoxide, NOx, hydrocarbons and evaporative fuel emissions.

Regulation

Your engine has been designed to meet current Environmental Protection Agency (EPA) and the California Air Resource Board (CARB) clean air standards. The regulations dictate that the manufacturer provides operation and maintenance standards regarding the emission control systems. Tune up specifications are provided in the Specifications section and a description of the emission control system may be found in the appendix to this manual. Adherence to the following instruction will ensure your engine meets the emission control standards.

Modification

Modification of the emission control system may lead to increased emissions. Modification is defined as the following:

- Disassembling or modifying the function or parts of the intake, fuel or exhaust system.
- Modifying or destroying the speed governing function of the generator.

Engine faults that may affect emission

Any of the following faults must be repaired immediately. Consult with your authorized service centre for diagnosis and repair:

- Hard starting or shut down after starting.
- Unstable idle speed.
- Shut down or backfire after applying an electrical load.
- Backfire or after fire.
- Black smoke and/or excessive fuel consumption.

Replacement parts and accessories

The parts making up the emission control system in your product's engine have been specifically approved and certified by the regulatory agencies. You can trust that the replacement parts supplied by customer service have been manufactured to the same production standard as the original parts. The use of replacement parts or accessories which are not designed by – may negatively affect the engine emission performance. Therefore only use replacements parts and accessories from a qualified service centre to guarantee that the replacement products will not adversely affect emission performance.

Replacement parts other than those from an authorized service centre will void the warranty.

Air Index (Models certified for sale in California)

An Air Index Information label is applied to engines certified to an emission durability time period in accordance with the requirements of the California Air Resources Board.

The bar graph is intended to provide you, our customer, the ability to compare the emissions performance of available engines. The lower the Air Index, the less pollution.

The durability description is intended to provide you with information relating to the engine's emission durability period. The descriptive term indicates the useful life period for the engine's emission control system.

The Air Index Information hang tag must remain on the generator until it is sold. Remove the hang tag before operating the generator.

15. LIMITED WARRANTY

Toll Free: 1-877-528-3772
E-mail: support@hyundaipower.ca
Online: www.hyundaipower.ca

Hyundai Power Equipment products are distributed by:
Midland Power Inc.
376 Magnetic Drive, Toronto, ON M3J 2C4, Canada

This product is warranted to be free of defects in material and workmanship for three years from date of purchase. This warranty guarantees that any defective parts will be repaired or replaced at no cost, including diagnosis and replacement parts.

Limited Warranty Periods

Recreational and Residential use: Three Years Limited

- 1st Year: Parts and Labor
- 2nd and 3rd Year: Parts only

Commercial use: 6 months limited, parts and labor

This limited warranty begins at the initial time of retail purchase and covers manufacturer's defects caused by a defect in components or workmanship during the three (3) year period. The warranty coverage is continual from the initial date of purchase and does not restart at anytime under any circumstances. This limited warranty is valid for residential or recreational applications only and only when the generator receives all necessary preventative maintenance as described in the User Guide.

The repair or replacement of a generator will take place within a reasonable period of time during normal business hours. All repair and replacement parts shall be warranted for (90) days after the initial date of installation or purchase.

Limitation of Remedies and Disclaimers

Midland International Inc. disclaims any responsibility for loss of time or use of the generator in a recreational vehicle or any vehicle in which the generator is installed, transportation, commercial loss, or any other incidental or consequential damage. Any implied warranties are limited to the duration of this written warranty.

THE FOREGOING LIMITED WARRANTY IS EXCLUSIVE OF AND IN LIEU OF ALL OTHER WARRANTIES OF MERCHANTABILITY, FITNESS FOR A PARTICULAR PURPOSE AND OF ANY OTHER WARRANTY WHETHER EXPRESS OR IMPLIED.

Consumable parts, such as oil or fuel filters, fuel cut off valve, brushes, fuel injection nozzle valve, lubricant, or ignition plug, are not covered under this warranty. All expenses incurred in maintaining and replacing parts for generator shall fall on the purchaser. This warranty coverage does not include parts affected by accident and/or collision, corrosion or rust, normal wear, incorrect fuel type or fuel contamination, use in an application for which the product was not intended, unauthorized service, or any other misuse, neglect, incorporation or use of unsuitable attachments or parts. Damage to voltage regulators caused by failure to ground, shorting or overloading will not be covered under this warranty. Under this Warranty, we do not have the obligation to bear any transportation fees of any product to/from an authorized Warranty Center. Unauthorized alteration, installation or any cause other than defects in material or workmanship of the product will not be covered under the warranty.

Exclusions Not Covered by this Limited Warranty

- Normal engine/alternator wear
- Damage caused by lack of maintenance as described in the Hyundai User Guides, or negligence by using improper or impure motor oil, coolant, or fuel
- Damage caused by accidents, improper installation or storage;
- Damage caused by water ingestion, submersion, or external water damage
- Damage or non-performance caused by operation of the generator set in a marine application
- Damage caused by operation with improper fuel, or at speeds, loads, conditions, or modifications contrary to published specifications.
- Items not supplied by Hyundai, including, but not limited to, starting batteries, battery cables, external wiring, fuel lines, filters, etc;(refer to exclusions)
- Repairs made during the warranty period, without first obtaining a case number from Hyundai

Batteries

Batteries supplied with any generator product should be considered a bonus item and not covered by warranty. Batteries can be damaged by shock, shorting terminals, heat, acid spillage and a number of other factors that cannot be controlled after they have left our facility. It is the customer's responsibility to take great care when handling a battery so no spillage of acid will occur and cause corrosion; damage caused by battery acid is not covered under this warranty.

Our Warranty Rights and Obligations

California

The California Air Resources Board and Midland Power Inc. are pleased to explain the emission control system warranty on your Midland Power Inc. engine. In California, new spark-ignited small off-road equipment engines must be designed, built, and equipped to meet the State's stringent anti-smog standards.

Other States, U.S. territories, and Canada

In other areas of the United States and in Canada, your engine must be designed, built, and equipped to meet the U.S. EPA and Environment Canada emission standards for spark-ignited engines at or below 19 kilowatts.

All of the United States and Canada

Midland Power Inc. must warrant the emission control system on your power equipment engine for the period of time listed below, provided there has been no abuse, neglect, or improper maintenance of your power equipment engine. Where a warrantable condition exists, Midland Power Inc. will repair your power equipment engine at no cost to you including diagnosis, parts, and labor.

Your emission control system may include such parts as the carburetor or fuel injection system, the ignition system, and catalytic converter. Also included may be hoses, connectors, and other emission-related assemblies.

Emission Control System Warranty Parts:

This list applies to parts supplied by Midland Power Inc. and does not cover parts supplied by the equipment manufacturer. Please see the original equipment manufacturer's emissions warranty for non-Midland Power Inc. parts.

Consumable parts are covered up to a maximum of 30 days.

SYSTEMS COVERED IN WARRANTY	PARTS DESCRIPTION
Fuel Metering	Carburetor assembly (includes starting enrichment system), Engine temperature sensor, Engine control module, Fuel regulator, Intake manifold
Evaporative	Fuel Tank, Fuel Cap, Fuel Hoses, Vapor Hoses, Carbon Canister, Canister Mounting Brackets, Fuel Strainer, Fuel cock, Fuel Pump, Fuel Hose Joint, Canister Purge Hose Joint
Exhaust	Catalyst, Exhaust Manifold
Air Induction	Air filter housing, Air filter element
Ignition	Flywheel magneto, Ignition pulse generator, Crankshaft position sensor, Power coil, Ignition coil assembly, Ignition control module, Spark plug cap, Spark plug
Crankcase Emission Control	Crankcase breather tube, Oil filler cap
Miscellaneous Parts	Tubing, fittings, seals, gaskets, and clamps associated with these listed systems

Warranty Claim Procedure

Warranty service must be performed by one of our authorized service dealers. Do not return your product where purchased. If you feel your generator is malfunctioning due to a defect or misuse, simply contact our customer support center for technical advice, a warranty claim or general information. Warranty service, operation assistance and product support is provided by Midland Power Inc., contact us at the numbers below.

Product Registration Instructions

Product registration is required for product support and warranty coverage. You can register online at www.hyundaipower.ca. Once your registration is complete, your receipt will be on file and any future warranty claims will be easily created. If you wish, you can confirm your registration by e-mail inquiry at support@hyundaipower.ca

Proof of purchase is required for warranty claims. Keep a copy of the original receipt, UPC code and serial number with this user guide.

Customer Service

Online: www.hyundaipower.ca

E-mail: support@hyundaipower.ca

Toll Free: 1-877-528-3772

HYUNDAI HYSERIES